YAMAHA YZR500 OW70 1983

Cod. GB12-M01

Transkit Photo etched parts compatible with Tam.14075 Taira Version

Chain with Alluminium parts

GB MODELS made in Italy

www.gbmodels.it

FRONT BRAKE DISK

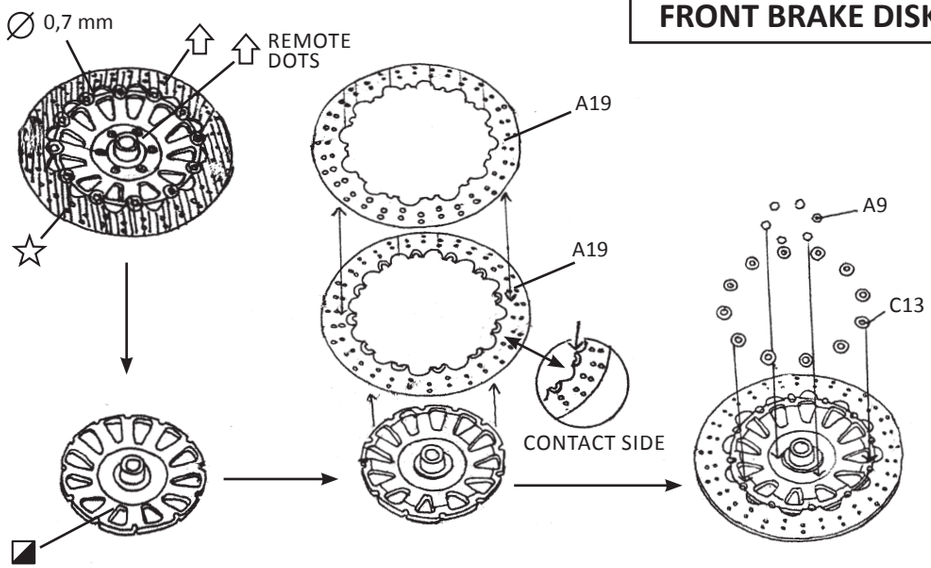

FRONT FORK

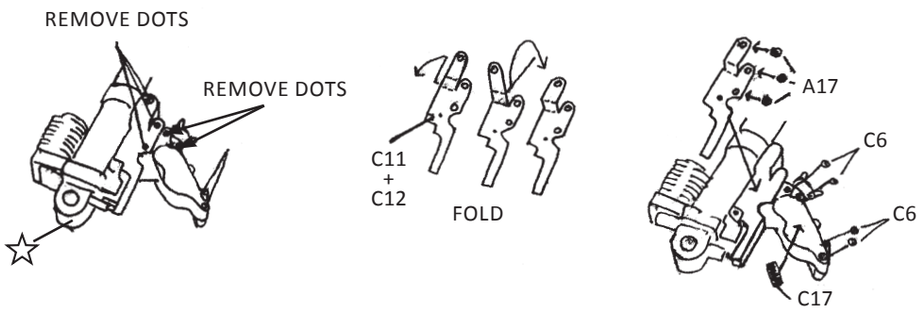

STEERING - HEAD

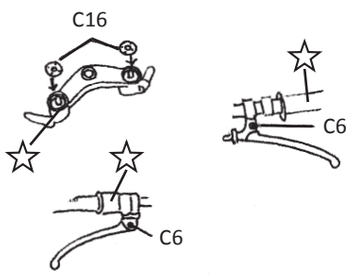

FAIRING

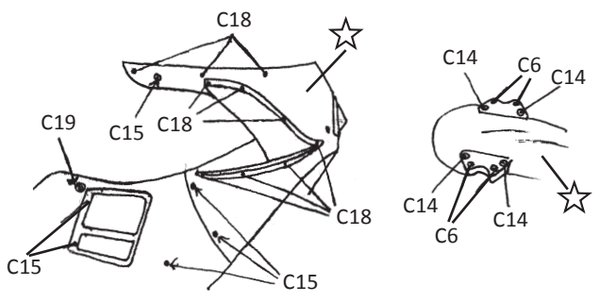

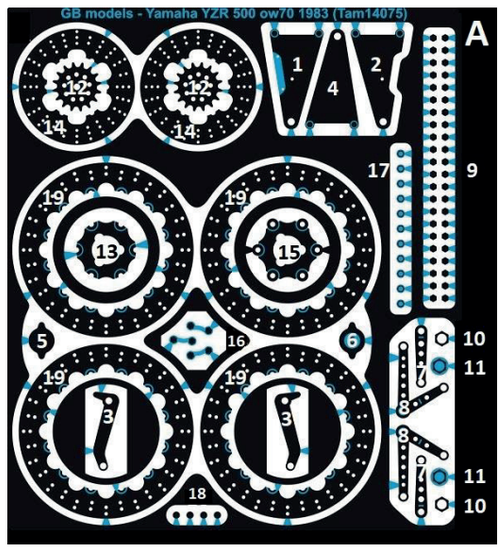

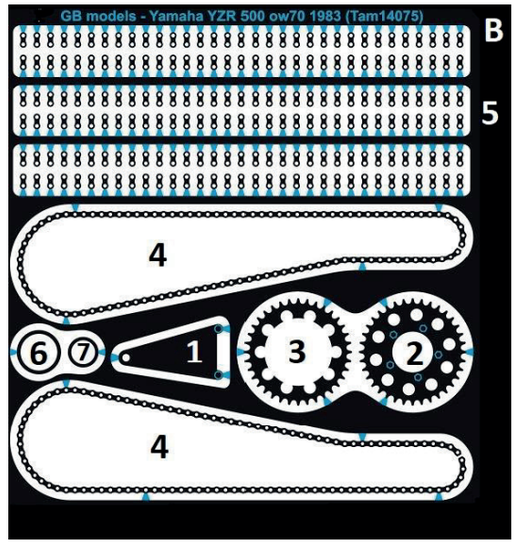

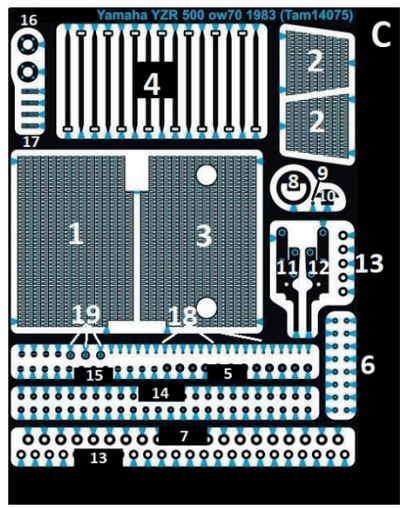

ALLUMINIUM PARTS

Turned Alluminium parts for chain assembling

- Original part
- Keep original part
- Remove where indicated
- Drill
- Reduce the thickness

RADIATOR

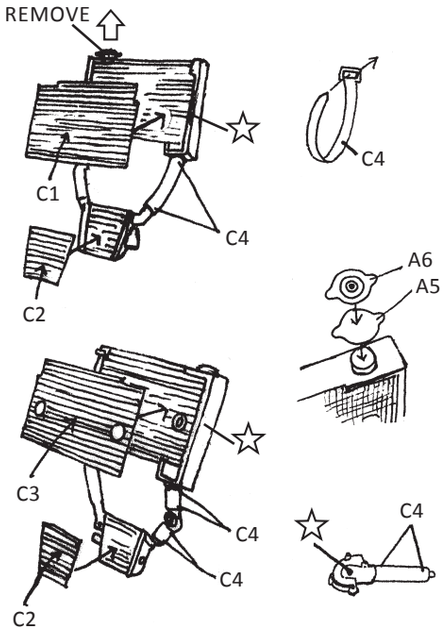

BRAKE LEVER

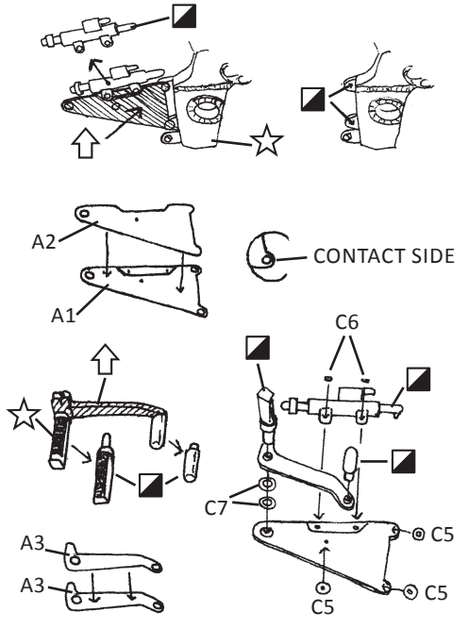

GEAR LEVER

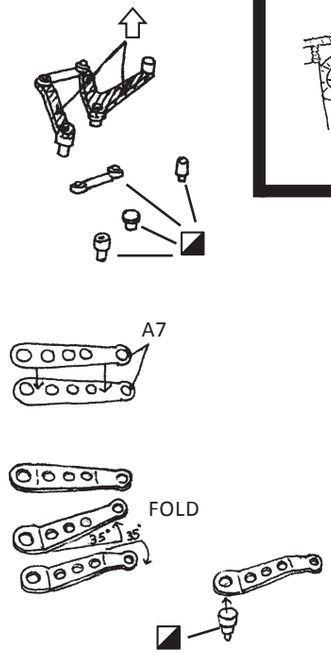

LEFT SIDE FOOTPEG

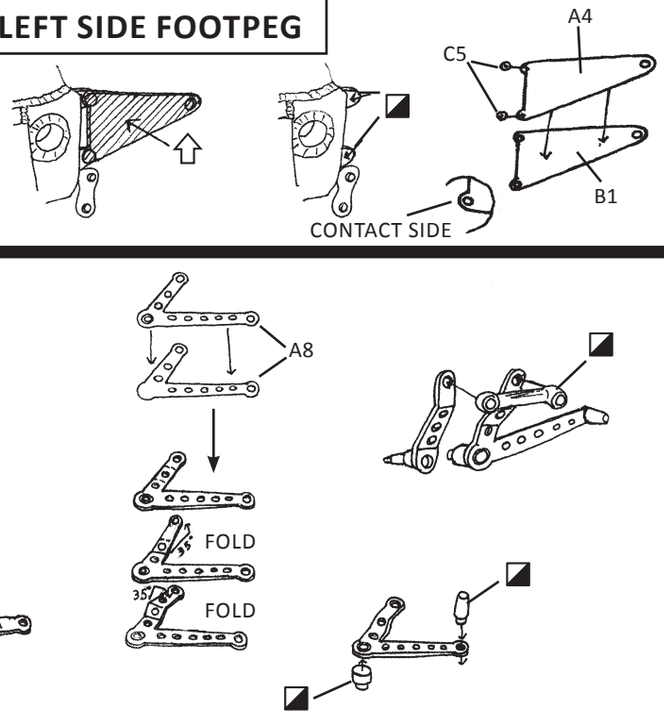

REAR SPROCKET

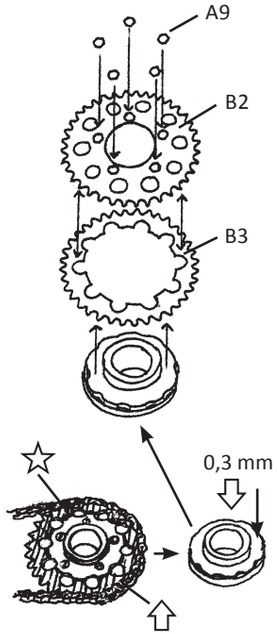

FRONT SPROCKET

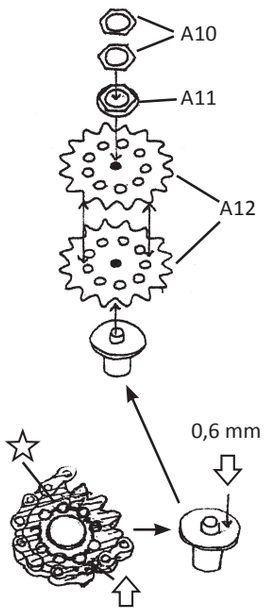

REAR BRAKE DISK

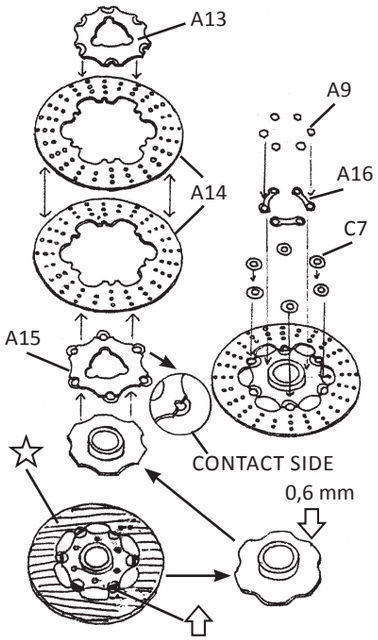

CHAIN ASSEMBLING

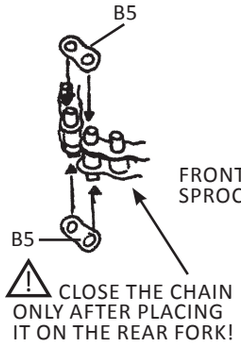

ALLUMINIUM

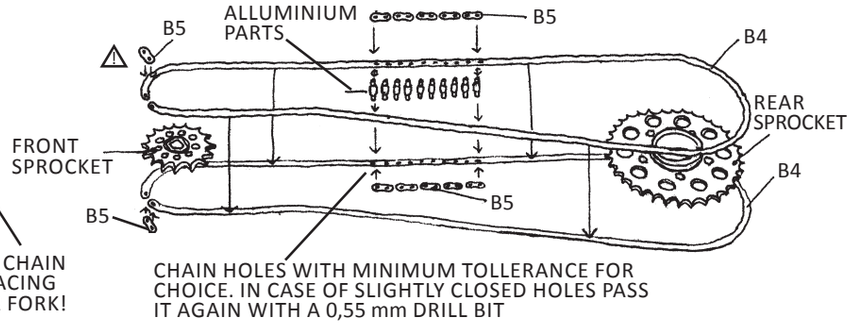

REAR CALIPER

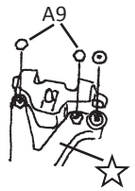

FUEL CAP

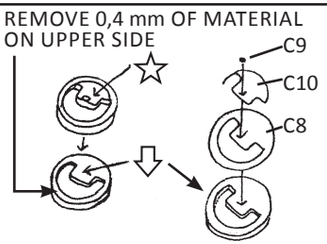

DASHBOARD

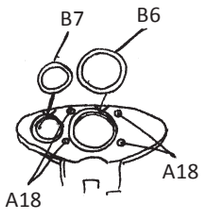
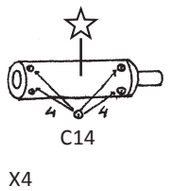
EXHAUST PIPE